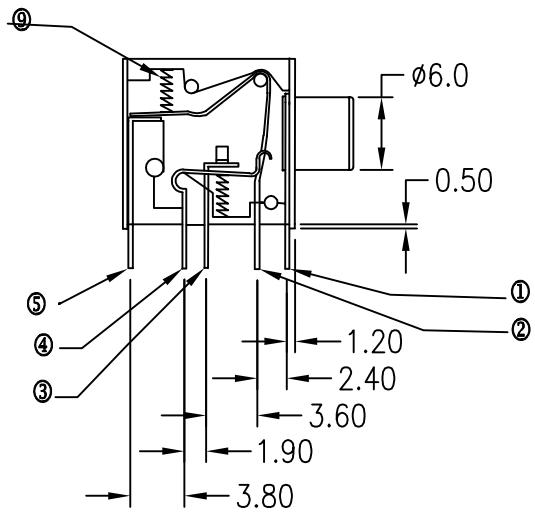

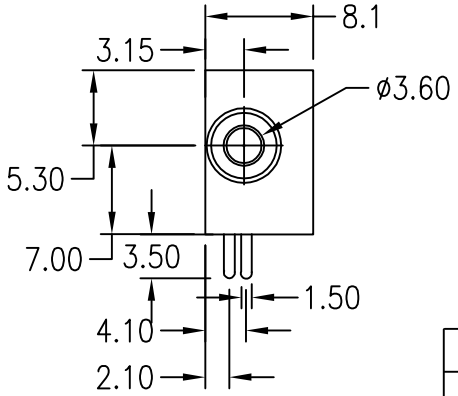

NO.	NAME	MATERIAL	FINISH	Q'TY
1	EARTH TERMINAL	BRASS t=0.3	SILVER PLATED	1
2	TIP SPRING	PHOSPHOR BRONZE t=0.3	SILVER PLATED	1
3	RING SHUNT	PHOSPHOR BRONZE t=0.3	SILVER PLATED	1
4	RING SPRING	PHOSPHOR BRONZE t=0.3	SILVER PLATED	1
5	TIP SHUNT	BRASS t=0.3	SILVER PLATED	1
6	BUSHING	BRASS	NICKEL PLATED	1
7	HOUSING	PBT+FIBRE	BLACK	1
8	COVER	PBT+FIBRE	BLACK	1
9	SPRING	STAINLESS STEEL	NICKEL PLATED	2

MODEL NO.	5B	5BL	5R	5GR
COLOR	BLACK	BLUE	PINK	GREEN
PANTONE		284C	701C	577C

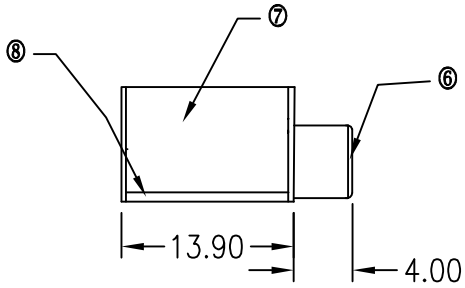

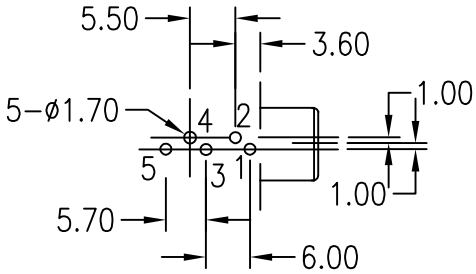

PCB LAYOUT
(BOTTOM VIEW)

SCHEMATIC

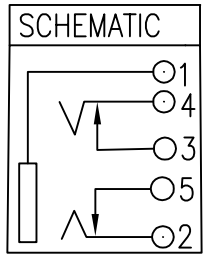

易昕企業有限公司
LEAMAX ENTERPRISE CO., LED.

PROJ	SCALE : F DO NOT SCALE DWG		MOLD NO 3276-5		
APP			MODEL	FILE NO	REV. X1
CHK	CCJ	90.06.10			
DGN	WU	90.06.10	UNIT MM	SHT 1 OF 1	SIZE A4
DRW	SHIEH	90.06.10			