REV	DESCRIPTION	DATE	NAME
A/0	Release To Production	2009.09.01	Abel

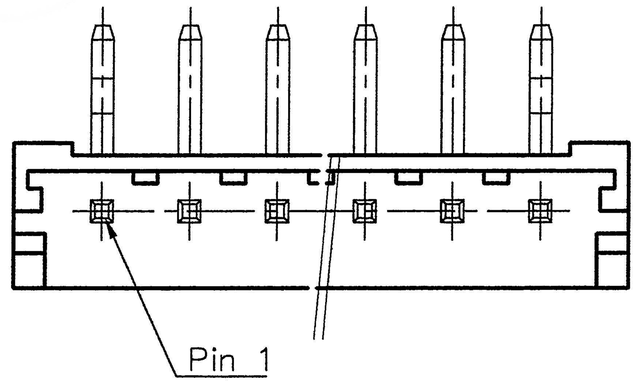

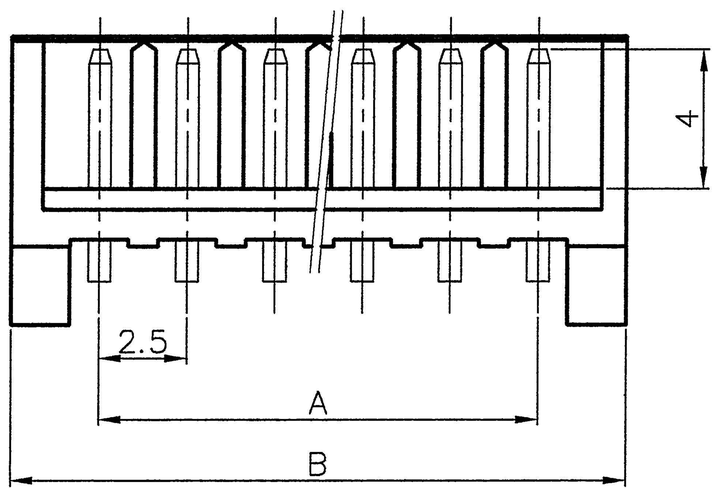

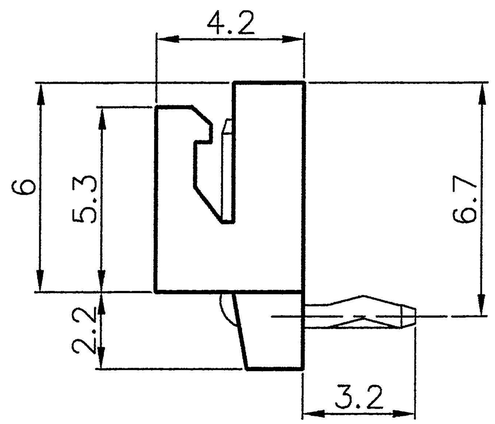

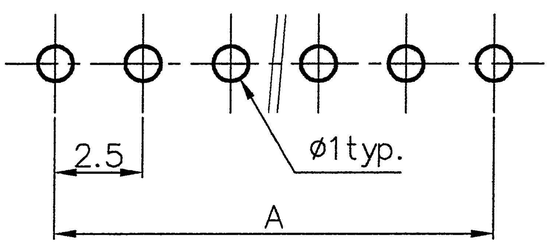

PCB LAYOUT

Specification
1.Current Rating3A AC/DC
2.Voltage Rating: 250V AC/DC
3.Contact Resistance: 10mΩ Maximum
4.Insulation Resistance: 1000MΩ Minimum
5.Dielectric Withstanding Voltage: AC 800V/Minute
6.Operating Temperature: −25°C~+85°C

Material:
1.Insulator: Nylon66 UL94V−0
2.Contact: Brass,SQ=0.64

Finish:
1.Insulator: Nature
2.Contact: Tin Plated

4322 XX R E
- XX: Number of contact 02~15
- R: R/A type
- E: RoHS Compliant

Poles	Dimension A	Dimension B	Note
2	2.50	7.50	
3	5.00	10.00	
4	7.50	12.50	
5	10.00	15.00	
6	12.50	17.50	
7	15.00	20.00	
8	17.50	22.50	
9	20.00	25.00	
10	22.50	27.50	
11	25.00	30.00	
12	27.50	32.50	
13	30.00	35.00	
14	32.50	37.50	
15	35.00	40.00	

TOLERANCE
X. ±0.35
X.X ±0.25
X.XX ±0.15
X.XXX ±0.05
ANGULA ±3°
UNLESS OTHERWISE SPECIFIED

	NAME	DATE
DRAWING 繪圖	Abel	2009.09.01
CHECKED 審查	Jasmine	2009.09.01
APPROVE 核准	James	2011.08.03

UNITS: mm | SCALE: Free | SIZE: A4

LEAMAX ENTERPRISE CO., LTD
易昕企業有限公司

TITLE / 品名：
WAFER 2.5 DIP90W 亮錫袋裝 With Kink

PART NO. 料號: 4322xxRE

1/1